ISSUE JANUARY 2020

KLINGER
trusted. worldwide.

KLINGER YEARBOOK

365 days of plant safety

www.klinger-international.com

IMPRINT

Publisher:
KLINGER Holding GmbH
Am Kanal 8-10 / A-2352 Gumpoldskirchen
Group Marketing & Communications:
Christina Raimann

Chief Editor: Christina Raimann
Editors: Kathrin Karner, Bernhard Strasser

Layout: vorauerfriends communications gmbh
Traunufer-Arkade 1, 4609 Thalheim bei Wels

EDITORIAL

Christoph Klinger-Lohr
CEO

Daniel Schibli
CEO

Peter Müller
CFO

Dear Readers,

Welcome to our KLINGER Yearbook. With this edition we would like to invite you to take a look at what we have achieved for our customers in the past year. Our publication is divided into two sections and promises something for everyone.

"What's new at KLINGER" focuses on Group-internal activities. They were initiated in order to improve the quality of our wide range of products and services or to provide you with valuable information for your sealing technology, fluid control, plant safety and shutdown needs: Browsing through our selection will introduce you to our latest acquisition, the Italian industrial valve manufacturer Burocco. Furthermore, KLINGER Italy is present with its new range of magnetic level gauges. Customer proximity is written in capitals at KLINGER, which is why it is our pleasure to inform you that KLINGER South Africa has opened another branch: With Mossel Bay, their comprehensive network now comprises 11 locations. And because good news is always welcome, you will be pleased to learn that KLINGER Dichtungstechnik has won the country's highest national award for its environmental declaration. You will also have the opportunity to hear from KLINGER Kempchen's highly acclaimed expert forums, the so-called "Kempchen Praxistage" and the "9th Münchener Forum Verbindungstechnologie". In terms of plant improvement, the KLINGER Yearbook offers you a lean management initiative in Australia, a state of the art primer facility in Switzerland, industrial robotics in Germany and a revolutionary regenerative thermal oxidation process in Austria.

Our "Success Stories", on the other hand, focus on the many fields for which we can rightfully claim to be "trusted. worldwide." We do this by earning the trust of our customers, such as for example that of Chevron in Thailand. As our customer references will show, the above also holds true for refinery operators, geothermal power plants as well as the water and wastewater business. It might come as a surprise, but thanks to a group of highly skilled and aptly named engineers known as KLINGER Precision, this even applies to wind turbines.

By way of closing, we would like to thank you for your business in 2019. We hope you enjoy our selection and wish you a pleasant read.

INDEX

WHAT'S NEW AT KLINGER

06 Portfolio expansion

08 On the level

10 Baywatch

12 Theory meets practice

14 Interdisciplinary approach

16 Prime mover

18 State of the art

20 Newsworthy

22 Lean machine

24 Lean on MiR

SUCCESS STORIES

26 Smooth geothermal operation

28 Look to windward

30 Sentry-approved

32 Leave no one behind

34 Contract renewed

35 In memoriam

WHAT'S NEW AT KLINGER

Acquisitions, automation and know-how leadership

At KLINGER we understand that all our actions revolve around our customers. Lean management initiatives in Australia improve our processes and increase our efficiency, while automation and robotics in Germany ensure that the shop floor can fully focus on demanding tasks. New acquisitions and product launches in Italy guarantee that we can provide our clients with the best the industry has to offer. In order to remain “trusted. worldwide.”, we also address how we manufacture our products and introduce new technologies in Austria and Switzerland. Trust, however, is based on transparency – and our environmental declaration has received the highest national award. And information-sharing is caring: This is why we sponsor, organize and participate in multiple industry conferences and events: Because even if it is our core business, plant safety concerns us all.

PORTFOLIO EXPANSION

KLINGER Group acquires Italian industrial valve producer Burocco

Burocco features state of the art manufacturing facilities for control valves, on-off valves, manual valves and ball valves

Effective July 2019, the KLINGER Group has acquired the Italian manufacturer Burocco Industrial Valves. KLINGER's latest acquisition is located in Northern Italy. The company specializes in control valves, on-off valves, manual valves and ball valves. This product portfolio will be used as a strategic addition to the existing product ranges of the KLINGER valve manufacturers KLINGER Fluid Control and KLINGER Schöneberg and to facilitate cross-selling activities.

Burocco Industrial Valves was formed in 1954 and has since continuously earned itself a reputation as a high-quality and trusted supplier for various industries. Its customers, both in Italy and in 30 other countries, are active in the chemical, pharmaceutical, natural gas, cryogenic, steel and sanitary industry. Furthermore, the company also delivers to OEM manufacturers, where its valve products are used for textile machines, boilers, autoclaves and dosing systems. "Burocco Industrial Valves first came to our attention around five years ago," explains Group CEO Daniel Schibli, adding: "This is due to the fact that KLINGER Italy and our latest acquisition entered into business relations – we supplied them with KLINGERSIL®C-4500 gasket and KLINGER® Graphite Laminate SLS materials for their control and on-off valves."

World of opportunities

As a consequence of its sound market position, Burocco will remain a separate entity. Following the retirement of the company's former owner, Raffaele Pittaluga, Managing Director of KLINGER Italy, has been charged with leading the new company. He outlines the way forward: "We have identified three focal points that we want to address: Increased exports, a greater share in our local market and production benefits." With regard to the former, Mr. Pittaluga explains: "Our export activities currently comprise around 30 percent of our total sales. We want to introduce Burocco to foreign markets via our Sales & Distribution (S&D) companies present around the globe. In essence, this is the same approach as the one in place for our standard and magnetic level gauge

Burocco Industrial Valves is located in Pray, Northern Italy

BUROCCO
INDUSTRIAL VALVES

business. The second aspect concerns the local market. According to Mr. Pittaluga, the newest member of the KLINGER Group has a customer base of around 200 in Italy. “On the one hand, Burocco’s existing portfolio enables us to offer a broader range of products. On the other hand, it also facilitates cross-selling: The company’s control valves, for example, are a perfect match for the sealing, fluid control and instrumentation solutions we offer.” Last but not least, Raffaele Pittaluga also highlights the production benefits resulting from taking over the Italian industrial valve manufacturer: “Burocco has state of the art manufacturing infrastructure at its disposal. It could also be used to create synergies in the production of KLINGER Italy’s magnetic level gauges.”

In control

Burocco’s power of innovation is another characteristic that is entirely in line with the KLINGER Group’s corporate DNA, especially its value “Innovative Edge”. This is best exemplified by looking at one of its top products, the Series 4000 control valve. It was specifically designed for super vacuum-insulated cryogenic applications and can also be used in pilot or experimental plants. The body is built from stainless steel bars, making it configurable for virtually any type of utilization. The internal parts, on the other hand, can all be individually exchanged. This means that the valve body does not have to be removed from the pipe system during maintenance. Similar to the high-quality products of the KLINGER Group, Burocco’s valves are all tested and calibrated prior to delivery and promise long-term, maintenance-free use. Raffaele Pittaluga: “Burocco is without doubt the perfect addition to our Group. It will enable us to be closer to our clients and to offer them even more comprehensive packages. I am very much looking forward to introducing its products to our national an international customers via our global distribution network.”

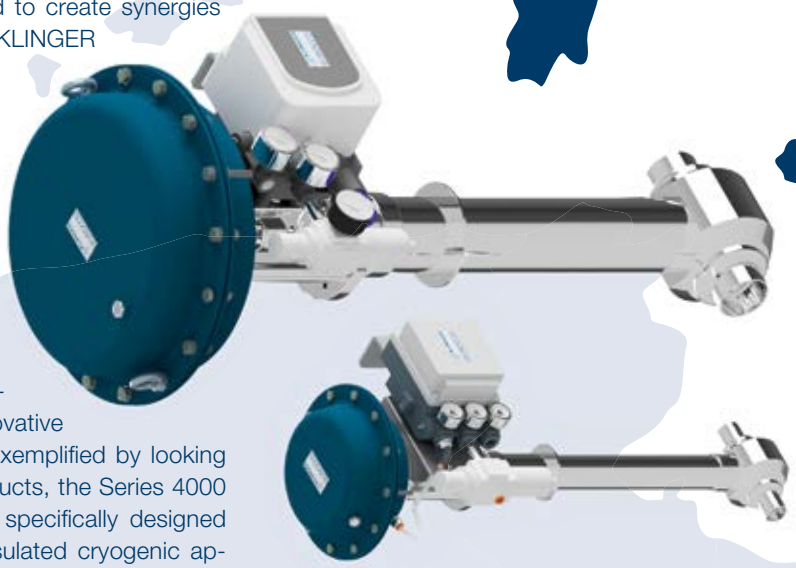

The Series 4000 control valve underlines the power of innovation of Burocco Industrial Valves

BUROCCO INDUSTRIAL VALVES

Burocco features state of the art manufacturing facilities for control valves, on-off valves, manual valves and ball valves

More Information:
http://www.burocco.it/en

ON THE LEVEL

KLINGER Italy launches KMAG range of magnetic level gauges

KLINGER Italy has installed a new production area for the manufacture of the new magnetic level gauges

KLINGER Italy is counted among the KLINGER Group's instrumentation experts. Effective September 2019, less than one year after the project initiation, the company has expanded its portfolio of glass level gauges to include magnetic level gauges. These measurement devices are now sold under the product name KMAG. They have been specifically developed for applications involving steam as well as toxic or hazardous liquids and gases. Furthermore, they can be utilized whenever a safe and immediate response to a level change is required.

"Our new KLINGER KMAG magnetic level gauges, which also feature an anti-vibration system, ensure that operators benefit from perfect visibility and continuous indication of the gas or liquid level," confirms Andrea Piazzolla, Technical Manager MLG Project at KLINGER Italy, "observing the fill level of the respective medium can be achieved either on the fully rotatable display or via remote access." According to Mr. Piazzolla, the KMAG series has been primarily designed with flexibility in mind. Its virtually unlimited size and configuration options make it ideal for a variety of installations and requirements. "These level gauges are made of fully welded steel. They are suitable for toxic, flammable or otherwise hazardous applications and can also be used in combination with highly aggressive chemicals," explains Andrea Piazzolla. In terms of response to the new product, he points to the orders received and the first deliveries to an important domestic customer. He adds: "As the level gauges are also maintenance-free, provide a clear reading of the fluid level and can be rendered in all lengths, we expect other companies from this sector as well as from the industries chemicals and energy as well as refineries to soon follow suit."

Diverse product range

KLINGER Italy has launched its new product line with the models KMAG 600 and KMAG 900. The three-digit designation refers to the applicable ANSI classes, i.e. the pressure-temperature ratings of pipe flanges as specified by the safety standards of the American National Standards Institute. "Work on a KMAG 300 model is

> Customers can now rely on our high-quality products to have all their level indication demands met, both with regard to hazardous and non-hazardous media."

Raffaele Pittaluga,
Managing Director of KLINGER Italy

already underway. This addition to our instrumentation range will be available soon," explains Mr. Piazzolla. He adds: "As of 2020, we will focus on further enhancing the KMAG offering with models specifically designed for high-pressure environments." The company's MLG project technical manager reveals that electronic support products are also on the horizon, and will comprise reed magnetic switches and transmitters.

Approved and certified

In order to ensure maximum plant safety and reliability, the KMAG series has undergone thorough testing. This is underlined by the fact that it is compliant with the ATEX 2014-34-EU directive, which governs equipment and protective systems intended for use in potentially explosive atmospheres. Furthermore, it also fulfills the requirements of the PED 2014-68-EU. This pressure equipment directive applies to the design, manufacture and conformity assessment of stationary pressure equipment with a maximum allowable pressure greater than 0.5 bar. Last but not least, KLINGER Italy has also obtained an IP66 rating for the visual scale. This guarantees complete tightness against contact contamination and protection against powerful fluid jets. "The new magnetic level gauges are the logical expansion to our already existing instrumentation offering, which includes a broad range of glass level indicators," concludes Raffaele Pittaluga, Managing Director of KLINGER Italy, "customers can now rely on our high-quality products to have all their level indication demands met, both with regard to hazardous and non-hazardous media."

The new magnetic level gauges are sold under the product name KLINGER KMAG

BAYWATCH

KLINGER South Africa opens new Mossel Bay branch

KLINGER South Africa's new branch in Mossel Bay

Mossel Bay is the latest branch to be opened by KLINGER South Africa. It has been established to provide potential and existing customers in the area with field services as well as fluid sealing and fluid control products and solutions. Headed by Branch Manager Johan Vogel and featuring a complement of technicians and sales persons, Mossel Bay is literally on the doorstep of a refinery belonging to the national oil company PetroSA, one of KLINGER South Africa's key customers.

"We have been working with PetroSA for 27 years," confirms Phillip Herbst, Managing Director of KLINGER South Africa. Referring to the latest branch opened by his company as well as its short distance to the customer's refinery and two further business locations, he adds: "We believe in proximity in all of its facets. This includes in-depth knowledge of facilities and operations to provide tailored products and solutions. It also extends to being geographically close to the customer, with an on-site presence as well as branches in the direct vicinity."

from left to right: Divan Howell and Jacqueline Jansen are both members of the Mossel Bay sales team

Ready for business

Branch Manager Johan Vogel is very proud of what has been achieved in a comparatively short time: "Serious planning for our new presence in Mossel Bay started in July 2019. We were open for business a mere four months later." The successful establishment of the new branch means that KLINGER South Africa is now able to directly offer the Mossel Bay and George area its full portfolio: Fluid sealing and fluid control products and solutions as well as field services. One of the main beneficiaries is PetroSA. "The national oil company has been relying on us for almost three decades," explains Mr. Vogel, adding: "In the course of our mutual partnership, we have ensured leak-free startups and mitigated downtime at the plant. In combination with our already existing office on their premises, the new branch will help us to even better serve their various shutdown and on-site service needs." Based on past experience, services requested from KLINGER in Mossel Bay should include on-line leak sealing, flange management and machining, hydraulic bolt torqueing, tightening as well as bolt tensioning.

One-stop shop for fluid sealing and control

With a current total of ten business locations and a permanent staff of 384, KLINGER is perfectly set up to master any fluid sealing or control challenge that might arise in the country. This is further underlined by the duality of the company: Not only does it distribute, install and maintain a wide range of gaskets and valves, it is also one of the KLINGER Group's manufacturers of high-quality solutions for the sealing industry. Again referring to Mossel Bay and the companies present there, Johan Vogel highlights the products that will be most in demand: "Maxiflex spiral wound and Maxiprofile kammprofile gaskets, ring type joints, double jackets, KLINGERSIL C-4461 Topmic and Hygrade LS PTFE as well as Teflon sheets and pre-cut

AT A GLANCE:

KLINGER South Africa

Products and services: Fluid sealing, fluid control, field services, associated services

Additional information:

- 14,000 sqm manufacturing and warehousing facility in Wadeville, Gauteng
- Certified in accordance with ISO 9001: 2015
- MERSETA-accredited training facility
- B-BBEE Level 3
- Research and development activities
- E-commerce solution for customers since January 2020

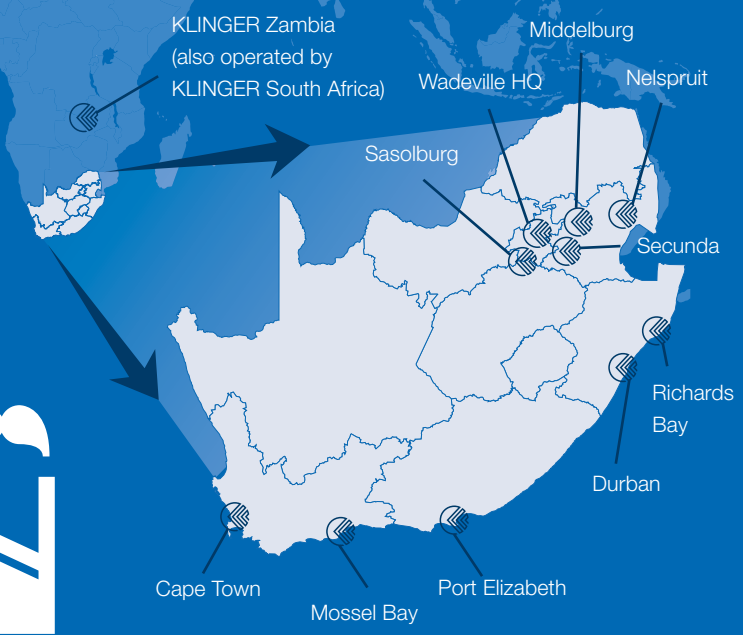

388 Employees (including KLINGER Zambia)

11 Business locations

gaskets immediately come to mind. On the valves-side our offering will primarily focus on butterfly valves with gearboxes as well as on third-party globe and gate valves. Last but not least, we also expect to see a significant demand increase in our insulation kits for offshore and onshore applications."

Full coverage

Summing up what has been achieved, Managing Director Phillip Herbst had the following to say: "KLINGER South Africa's development over the past years has been characterized by a continuous expansion into new regions and local markets. We have moved our Cape Town branch to better serve our customers. We have also opened or relocated other branches across the country. The most recent two examples are KLINGER Middelburg and KLINGER Mossel Bay." He concludes: "As an undisputed industry leader we have a certain duty towards our customers. Said duty should not be limited to outstanding fluid sealing and control products or to our field services. We understand that best service dramatically hinges on the ability to rapidly project it wherever required. This explains why customer proximity is one of our key success factors."

KLINGER Mossel Bay stocks an impressive inventory for a rapid response to customer needs

THEORY MEETS PRACTICE

KLINGER Kempchen's major event, the "Kempchen Praxistage" 2019, lauded by industry

Managing Director Klaus Schonebeck welcomes the attendees of the "Kempchen Praxistage" 2019

The "Praxistage" of KLINGER Kempchen have in the meantime turned into a household name for the sealing industry. They cater to its various needs, requirements and challenges. The event perfectly matches sealing theory and practice. Interest in attending is so great that the German organizers have to hold it across two days: Each time with a different audience. We take a closer look at the 8th "Praxistage" of KLINGER Kempchen.

The unique set-up of the "Kempchen Praxistage" is reflected by the role Managing Director Klaus Schonebeck plays during the event. As the host, he welcomes the around 170 participants in the morning. Then he leaves the stage to the partners, suppliers and customers of the company. "The 'Kempchen Praxistage' are definitely a KLINGER Kempchen event. But they are not really about us at all. We only provide and organize the platform. It is subsequently up to our speakers from all the branches of our industry to share their knowledge and insights," explains Mr. Schonebeck. This statement is easily verified: The program runs from 8 in the morning and concludes with an open discussion at 3:30 pm. It is filled with interesting topics. None of them are presented by KLINGER Kempchen employees. Company names such as the OAT Oberberg Armaturen Technik, Siemens or SGL Carbon are on the list. Service and technology providers also play an important role. In 2019 this was highlighted by the presence of both the Messtechnischer Service and the Temperaturmeßtechnik Geraberg as speakers. Their topics: the design of flange connections and the benefits of temperature measurement by means of thermal elements. The "Kempchen Praxistage" are also renowned for enabling institutions, authorities and agencies to have their say. This explains the presence of the TÜV SÜD Chemie Service as the concluding talk prior to the final discussion round.

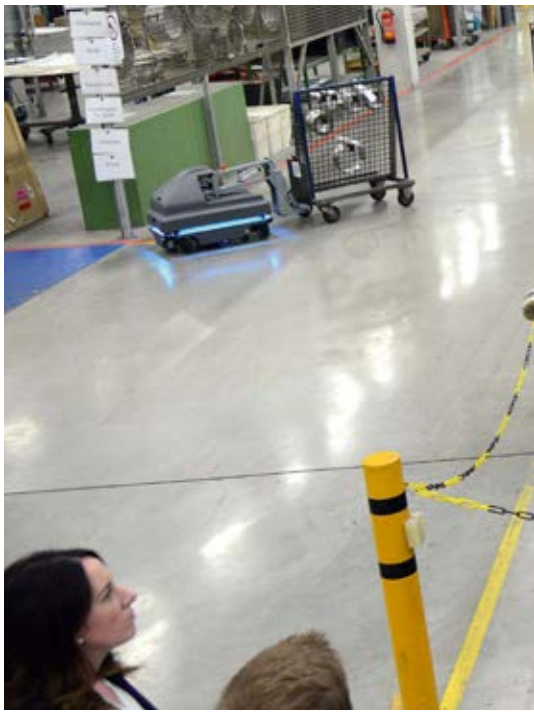

A tour of KLINGER Kempchen's plant provided insights into the im

For the industry, by the industry

For whom are the "Kempchen Praxistage"? Dirk Schmidt, in charge of sales at KLINGER Kempchen, answers: "Our attendees are just as diverse as the program on offer," he explains, adding: "Service technicians, engineers, technical directors, executives as well as researchers and scientists have all been welcomed to the 'Kempchen Praxistage'. And they are always welcome here." Mr. Schmidt shares that the attendees mostly hail from the chemical industry, oil & gas, the energy sector or are active in the field of plant engineering. The presentation held by SGL Carbon highlights what the audience is offered. This major manufacturer for the global sealing industry is a global company with more than 5,000 employees and 29 production sites worldwide. One of its business segments deals with the production of graphite materials and systems. In the course of his presentation, Martin Reinthaler, Senior Technical Sales Manager for Expanded Graphite, provided fascinating insights. He spoke in length about the manufacturing process, the properties and the application options of expanded graphite. His talk "Composite materials on the basis of expanded graphite as a sealing material" highlighted the characteristics of flexible graphite: For example its low fluid and gas permeability, its good chemical resistance, high flexibility and the lack of filler media or binding agents. He also illustrated the various benefits that the composite offers. These include the ease with which it can be removed, FDA-compliance with regard to process and product purity, or the excellent sealing performance. The latter applies at even low gasket stresses. Martin Reinthaler concluded that this graphite gasket material is among the best sealing solutions for the chemical industry. This is especially true for applications involving toxic, inflammable, polluting or high-cost media. As a result of the already mentioned process and product purity, they can also be used as flat gaskets for the food and pharmaceutical industries.

"Kempchen Praxistage":
Martin Reinthaler of SGL Carbon live on stage

A day worth remembering

Attending the "Kempchen Praxistage" also enabled the visitors to tour the plant of KLINGER Kempchen and meet "MiR", the company's new transport robot. Following the conclusion of the event, Marketing Manager Bärbel Derix sums up a selection of the responses: "The feedback received from our guests not only addressed the excellent quality of the presentations. It also included comments on the hospitality they enjoyed here at KLINGER Kempchen. Several visitors mentioned the guided tour through both our plant and the labs." Ms. Derix adds: "MiR was also the focus of attention quite a few times. Many attendees also expressed their wish to join us for the next installment of the 'Kempchen Praxistage'."

pressive manufacturing capabilities of the company

INTERDISCIPLINARY APPROA

KLINGER Kempchen co-hosts 9th "Münchener Forum Verbindungstec

The 9th Münchener Forum Verbindungstechnologie brings three different disciplines together

The "Münchener Forum Verbindungstechnologie" is a unique trade event held in Munich, Germany. It stands out among similar conferences thanks to its high-profile presentations and workshops that combine three different disciplines: Bolting, sealing and lubricating. Representing these fields, its latest installment was hosted by three companies: The industrial bolting experts HYTORC, the fastener and fixing technology wholesaler REYHER and the gasket expert KLINGER Kempchen.

The "Münchener Forum Verbindungstechnologie" takes place every two years. It offers its audience of industry representatives an interesting exchange of knowledge and ideas, networking opportunities and an abundance of topics with a clear focus on practical application. KLINGER Kempchen, Germany's premier manufacturer of gaskets, compensators and packings, has been a co-host of the event for many years. Klaus Schonebeck, Managing Director of KLINGER Kempchen, explains: "The 'Münchener Forum Verbindungstechnologie' brings together three related disciplines and addresses new developments, changes to standards as well as cutting-edge research results and studies." This apparently also applied to the 9th installment of the conference in Munich. "Bolting under extreme conditions: A case study from the South Pole", "Challenges to the working world posed by digitalization" and "Design execution requirements as a consequence of the new TA Luft" are just three of the examples of what the event offered its participants. "The 'Münchener Forum Verbindungstechnologie' is very popular among CTOs, technical sales representatives, operations managers and technicians, CAE engineers, constructors, maintenance as well as quality assurance

ACH

chnologie”

personnel,” states Mr. Schonebeck. He adds: “These individuals rarely come into contact with our representatives. In other words, the forum functions as a platform for them to also get insights into our latest developments.”

Hands-on experience

Asked about similarities to the “Kempchen Praxistage”, co-host Klaus Schonebeck stresses that this conference does not serve as a vehicle for the promotion of his company’s products and solutions, either. Instead, the participants are here to learn from each other. Next to the already mentioned presentations, this is also achieved by means of workshops held in the course of the event. One such workshop was headed by Torsten Bial, Technical Director at KLINGER Kempchen. His topic: “Turnaround engineering: the preparatory approach to leakage-free commissioning”. Workshop attendance, however, was purely voluntary and it was up to the workshop presenters to attract their own audience. Torsten Bial did this by showing a slide of his hunting dog Eila, promising to make the reason obvious at the end of the session. This minor marketing gag promptly netted him more than half of the attendees.

Tour de turnaround engineering

Turnarounds differ from projects or routine maintenance in many ways. They include, amongst others, a massive amount of activity within the facility, daily or hourly changes to the general setup, in some cases extreme dependency on the prevailing weather conditions or an abundance of unplanned measures as the result of ongoing inspections and checks. Additionally, scope and scheduling are continuously subjected to change. Material or delivery bottlenecks may occur as a result of unforeseen repairs. Mr. Bial underlined that a turnaround should not be underestimated and that it exerts both a significant physical and mental toll on participating employees. His path to leakage-free commissioning then divided the turnaround into different segments: A basic, an engineering, a coordination, and a turnaround support phase. Mr. Bial’s fresh approach to the art of turnaround engineering was evident on the slides numerous times and earned him

REYHER

several good-natured chuckles from his audience. The first slide of his TAR Support Phase had the caption “Let the games begin”, while the last one from the same phase simply read “Last man standing”. As promised, KLINGER Kempchen’s technical director concluded his workshop with a slide of a totally exhausted Eila.

The accompanying message: “Remain consequent and on target in following up on your turnaround preparations and strategies. This is comparable to the consistency you need to train a spotting dog such as Eila. Success will set in soon, even if you will be dog-tired by the end …”

A technical director and his dog: Torsten Bial and Eila

PRIME MOVER

KLINGER Switzerland switches to in-house production with own steel priming solution

from left to right: KLINGER Switzerland's Managing Director Eckhard Steeger, CEO Daniel Schibli, the late Chairman of the Supervisory Board Thomas Klinger-Lohr, and Head of Production and Logistics Urs Aschwanden, also KLINGER Switzerland, cut the ribbon

KLINGER Switzerland is best known in the automotive sector and among brake manufacturers for Polystrat. This rubber-coated steel material is used to produce noise-absorbing shims for disc brake pads as well as cylinder head gaskets. Following the erection of its own steel priming facility and the invention of a revolutionary steel primer, the Swiss company is ready to push its Polystrat offering to the next level.

"Steel plays a fundamental role in our Polystrat production process," states Eckhard Steeger, Managing Director of KLINGER Switzerland. The company has been producing this rubber-coated steel product for the automotive sector as well as for industrial gasket applications for more than 25 years. Preparing the metal prior to the application of the rubber layer, however, is also the most cost-intensive part of the procedure: "During rolling, it is covered in oil and grease. It has to be thoroughly cleaned, and then coated with a primer, which ensures that the rubber will bond," he explains. In the past all the necessary steps, up to and including priming, were carried out by one of the few steel suppliers offering this service. Needless to say, this is not an ideal value chain for KLINGER Switzerland. And it is about to change.

Homecoming

"A range of benchmark tests convinced us that it would make more sense to be able to manage the process ourselves. The deciding factors in this regard were quality and supply chain considerations," explains Urs Aschwanden, Head of Production and Logistics at KLINGER Switzerland. Having received the go-ahead from the Group management, the Swiss KLINGER company contracted a German plant engineer. Acting as prime contractor, the company was charged with the development and erection of a state of the art steel primer facility in a factory hall on the Egliswil premises. The pilot manufacturing line, which has in the meantime been completed, is approximately 50 meters long and spans three levels. It holds all the necessary programmable logic arrays and modules to first clean and then subsequently coat the rolled steel. Standing in front of the impressive in-house solution that has brought the Polystrat production fully home to Egliswil, Mr. Aschwanden specifies: "The new facility gives us the ability to carry out and control all the steps required prior to application of the rubber layer: Treatment and cleaning of the metal as well as priming." Speaking in practical terms, this means that KLINGER Switzerland is no longer reliant on its former subcontractors. Furthermore, it can improve its already high level of quality by selecting the steel supplier of its choice. Simultaneously, the company's research and development department has achieved a breakthrough of its own: It has come up with a new primer formula that will replace the third-party solution currently in use. "The invention of our very own primer coating represents the last process component on the road to the completed Polystrat product that we can now also produce in-house," states Eckhard Steeger.

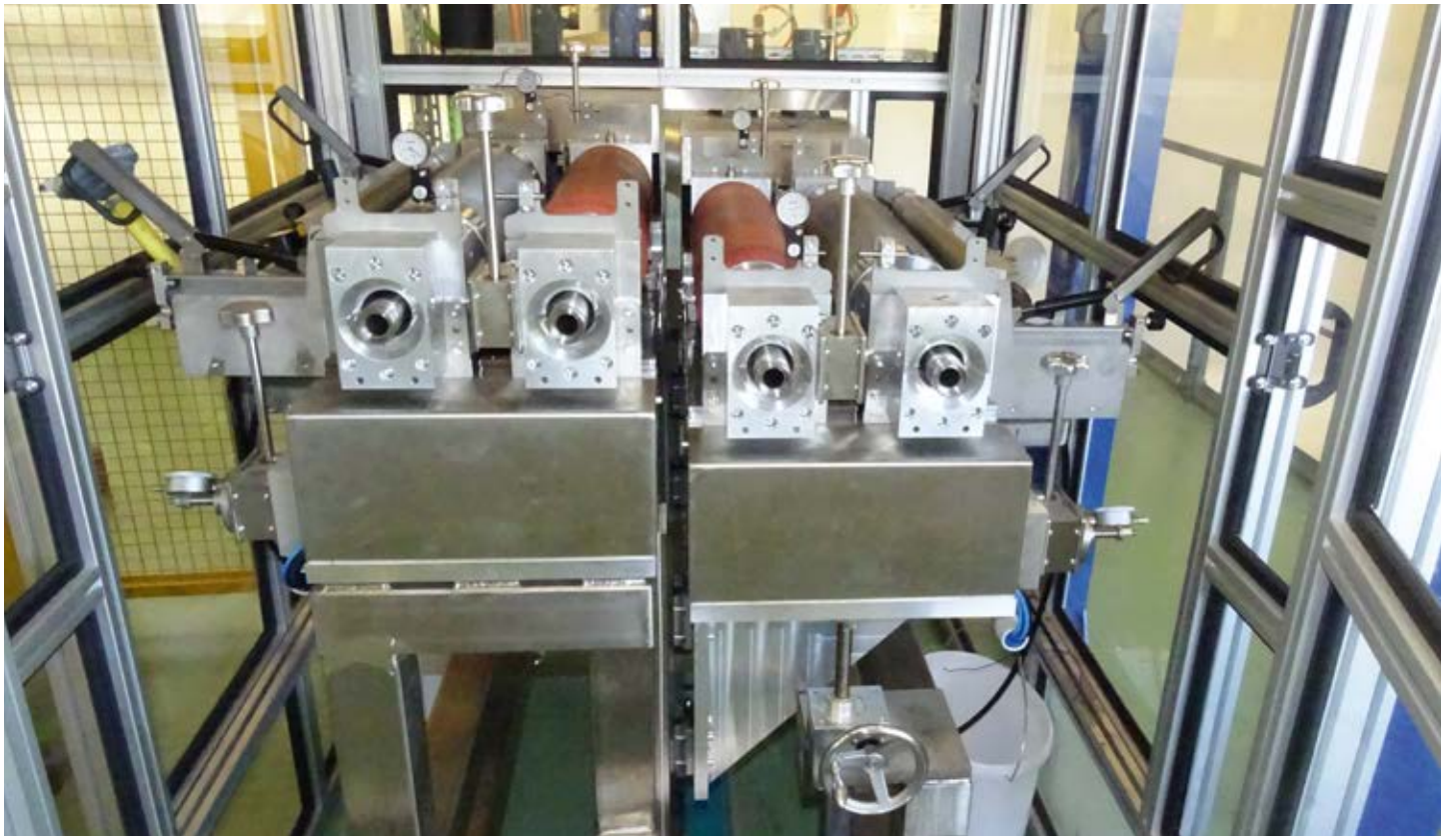

An inside look at a section of KLINGER Switzerland's state of the art primer coating solution

In-house always wins

The steel primer facility will be moved from trial to standard operation in early 2020. Based on preliminary results gathered so far, Eckhard Steeger foresees a timely start. And he sees benefits on all sides: "Our independence from a limited choice of suppliers will allow us to choose the steel producers we want. This will result in further quality improvements for our customers. It will also enable improved delivery scheduling, due to the fact that we will be able to exert full control over the production process. All in all, I'd say that bringing Polystrat 'home' is a win-win situation for all our stakeholders."

Cleaning the rolled metal is now also firmly in the hands of the Swiss Polystrat manufacturer

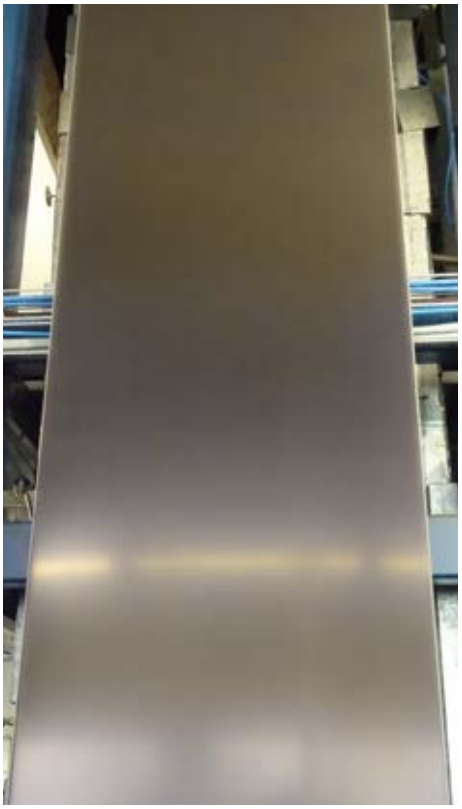

Polystrat is very much in demand in the automotive industry

STATE OF THE ART

KLINGER Dichtungstechnik increases resource efficiency with regenerative thermal oxidation plant for top-chem process

from left: Michael Sautter, Managing Director (commercial) of KLINGER Dichtungstechnik, Robert Schröger, Managing Director of CTP-DUMAG and Ernst Schäfer, Managing Director (technology) of KLNGER Dichtungstechnik, in front of the regenerative thermal oxidation plant

The Austrian gasket manufacturer KLINGER Dichtungstechnik produces its PTFE gaskets with filler material under the brand name KLINGER® top-chem. In order to enhance its product offering and to provide customers with additional benefits, the company is now investing into a regenerative thermal oxidation plant. It will ensure that no solvent residues are emitted and that waste heat can be fed back into the process.

Visitors to the KLINGER headquarters in Gumpoldskirchen, Lower Austria, will most surely have noticed a new construction site next to the road that runs in parallel to the premises. “This is where our new regenerative thermal oxidation plant will be located,” confirms Michael Sautter, Managing Director (commercial) of KLINGER Dichtungstechnik. And the plant, which has roughly the dimensions of a single-family home, is already beginning to take shape. Designed by the industrial combustion systems expert CTP-DUMAG, a next-door neighbor of the KLINGER Group, it is scheduled for completion in the first quarter of 2020.

Efficiency and competitiveness

Asked about the reasons for the new plant, Mr. Sautter explains: “Our regenerative thermal oxidation plant is part of a new manufacturing process for our high-performance PTFE sheets with fillers. It will allow us to increase our material efficiency as well as our annual sheet capacity. Furthermore, it will enable us to re-use our waste heat. This is in line with our ‘Sustainability’ value, as it contributes to resource conservation in our production.” According to the managing director, these improvements will benefit the customer and simultaneously increase the competitiveness of KLINGER®top-chem on the market.

Process evolution

Ernst Schäfer is KLINGER Dichtungstechnik’s Managing Director (technology). He is in charge of the technical details of the project. “Our new manufacturing solution includes new process technologies and we have also developed high-performance tempering and sintering ovens to achieve our goals. The reason for our regenerative thermal oxidation plant, however, is a new solvent we have introduced. Our previous version had reached its operational limits, resulting in bottlenecks and process efficiency potentials not being realized,” he explains, adding: “This is why we switched.” The Austrian clean air act stipulates that this lubricant must be removed from the raw gas that is primarily created during tempering of the PFTE sheets. “We had two options,” remembers Ernst Schäfer, “either to opt for a thermal oxidation solution or take the path of regenerative thermal oxidation.” Although both options provide the legally required results, calculation models quickly highlighted a number of advantages that spoke loudly in favor of a regenerative approach. “The investment costs were admittedly significantly higher,” states Mr. Schäfer, “on the benefits-side we found lower operating costs, significantly reduced CO_2 emissions and less thermal energy demand.” The latter, by the way,

"The heat return figure provided by the regenerative thermal oxidation process is significantly higher than the one offered by thermal oxidation. In fact, we require only very low volumes of natural gas to fire the burner – the process will allow for an almost autothermic operation."

"Next to significant energy savings, the additional recuperator also saves a considerable amount of CO_2: more than 150 tons per year."

Ernst Schäfer,
Managing Director of KLINGER Dichtungstechnik (technology)

is explained by the improved waste heat recovery, meaning that more excess heat can be fed back into the process.

A matter of regeneration

In the course of regenerative oxidation, the scrubbed gas, which is already solvent-free, transfers its heat to a regenerator, which in turn heats the raw gas at an average temperature of approximately 180 to 200 °C. The regenerators themselves consist of ceramic honeycombs, which can be used to store heat. A minor portion of the solvent removal already occurs at the regenerators. The majority of the oxidation process, however, takes place in the burner. "The heat return figure provided by the regenerative thermal oxidation process is significantly higher than the one offered by thermal oxidation. In fact, we require only very low volumes of natural gas to fire the burner – the temper process is almost autothermic," explains Mr. Schäfer. Completing his tour of the technological highlights, Ernst Schäfer also points out the additional recuperator, which pre-heats the primary air: "Following its passage through the regenerator, the scrubbed gas transfers its heat to the primary air, which further reduces the energy demand of the overall drying process." Next to significant energy savings, this also saves a considerable amount of CO_2: At an operating grade of 100 percent, they amount to more than 150 tons per year.

Work in progress: the burner station up close

KLINGER®top-chem offensive

Michael Sautter and Ernst Schäfer are both satisfied with the progress of their new plant. "We are very much looking forward to showing our customers the results of our redesigned manufacturing process for the KLINGER®top-chem product," explains Mr. Sautter, "as a maintenance-free gasket that does not age, it is definitely a solution for industries where absolute durability and an extremely long service life are a must: for example in district heating."

NEWSWORTHY

KLINGER Dichtungstechnik's environmental statement receives Austria's highest national award

Ingrid Stassner and Stephan Piringer receive their certificate and award from Federal Minister Maria Patek (center) in the course of the 2019 Green Cooperation conference (Copyright: Paul Gruber on behalf of the Ministry for Sustainability and Tourism)

KLINGER Dichtungstechnik is Austria's leading gasket manufacturer. Its registration for the voluntary EU eco-management and audit scheme (EMAS) dates back to 1998. This makes it one of the earliest companies in Austria to sign up. The Austrian Federal Ministry for Sustainability and Tourism has in the past already honored its pioneering role in environmental protection. In 2019 the same ministry presented KLINGER Dichtungstechnik with the highest national award for its environmental statement.

EMAS, the voluntary eco-management and audit scheme of the European Union, comprises four important pillars: The environmental policy, the environmental management system, the environmental program and the environmental declaration. The latter is published annually and accessible by the public as well as by other interested parties. It provides key figures on a company's activities that have an impact on the environment. Amongst others, this includes concrete information on the amount of waste generated, or electricity and water consumed. The corresponding results prove whether a company is improving its environmental protection measures. An environmental declaration typically includes a significant amount of columns that detail reductions, the amount of solvent recovered or CO_2 emissions. This makes for relatively "dry" reading. Stephan Piringer, amongst others in charge of environmental protection and safety topics at KLINGER Dichtungstechnik, and Waste Officer Ingrid Stassner addressed this topic. They decided to publish their environmental statement in a newspaper format and were so convinced by the result that they subsequently submitted it for an award.

Highest accolade

The environmental award is the most important environmental prize that the Federal Republic of Austria can bestow. The corresponding winners are nominated by an expert jury. Their verdict in the case of KLINGER Dichtungstechnik: "KLINGER Dichtungstechnik published its environmental statement in the form of a newspaper. This entices the audience to thoroughly read the publication. Environmental impacts and environmental performance are illustrated to the point. The same also applies to the team responsible for the environmental management system." The award ceremony took place in the course of the 2019 Green Cooperation conference in June. Federal Minister Maria Patek personally presented Ingrid Stassner, accepting the award on behalf of her colleagues, with the highly-sought recognition at the "Orangerie" in Schönbrunn Palace.

Environmental press

Extremely pleased with the jury's verdict and proud of the award, Stephan Piringer summarizes why a novel approach had to be taken: "Today's media, especially in the environmental field, are full of data, facts and figures. Simply breezing over them is not the desired outcome. An environmental statement should be something that is actively read. And this is what you do with a newspaper." The format chosen by the Austrian gasket manufacturing experts bears some resemblance to one of the country's leading daily publications. "Reading the morning paper is associated by many as a relaxing activity. This is an enjoyable experience that is not necessarily work-related," says Stephan Piringer. Although it resembles a newspaper, it contains all the mandatory EMAS-related figures. Furthermore, KLINGER Dichtungstechnik's environmental statement also features articles and contributions from different departments. Interested readers can learn how offcuts are turned into raw material. Or how the company undertakes drills with the auxiliary fire brigade to be best prepared for any situation. A crossword made up of terms featured in the publication is just as much present, as is a comic: It illustrates what a world without KLINGER would look like. "Working with this format has many advantages. For example, everybody who contributes to our sustainability and environmental protection activities tells his or her story," believes Ingrid Stassner. She adds: "Our environmental statement is no longer just the work of one person. It is the result of a cross-departmental team effort that we can all be proud of."

Recognized and rewarded: KLINGER Dichtungstechnik's latest environmental award

A word of thanks

Looking back, Stephan Piringer had the following to say: "I would like to thank all our contributors for helping to bring this award home to KLINGER Dichtungstechnik. Ingrid Stassner, however, deserves special thanks: She fully embraced the innovative approach that we had taken for our environmental statement. She believed in the project and saw it through to its award-winning end."

Good read: Stephan Piringer studies KLINGER Dichtungstechnik's environmental statement

A GOOD READ

Download the English version of KLINGER Dichtungstechnik's environmental statement here:

www.klinger.co.at

LEAN MACHINE

Lean management at KLINGER Australia leads to increased availability, efficiency and higher DIFOT

KLINGER Australia's plant in Western Australia

KLINGER Australia has completed its first full year of steadily evolving into a continuously leaner organization. Today, the Australian gasket manufacturer boasts an ERP system that is perfectly adapted to its lean management environment. And the numerous improvements on the shop floor, in the processes and availability are paying off. The delivery in full and on time (DIFOT), one of the company's key performance indicators, is steadily increasing towards the 95 percent mark. The main beneficiary of KLINGER Australia's lean management journey is of course the customer.

KLINGER Australia can track the origins of its lean management journey to a single, mission-critical incident. In 2014 a fire burned down the warehouse in Western Australia. The damage was substantial. "After the initial shock, we saw this as an opportunity to add a metal plant," remembers Ajith Gunasekera, CFO of KLINGER Australia, and adds: "This decision then forced us to take a closer look at our existing processes and systems. That was the moment we understood we needed a lean management approach, coupled with an ERP system capable of supporting it."

Going lean

Adhering to the motto "No shortcuts – whatever we do, we do it properly", KLINGER Australia set about transforming its production areas, processes and organization. "The lean management philosophy enables you to divide your activities into two main categories: Value and waste," says Kevin Woolley, Managing Director of KLINGER Australia. He explains: "Measures that contribute to the customer's benefit are valuable, everything else is considered wasteful." Applying this fact means that the mindset and corresponding measures had to be implemented across all departments. On the shop floor, for example, this subsequently led to efficiency increases as a result of physically rearranging the workstation layout. "Our components now spend significantly less time 'in transit' between production steps. Instead they are quickly handed over from station to station," confirms Michelle Ahola, Operations Manager at KLINGER Australia, "we have also streamlined our staging areas and moved some of our packing processes from the warehouse directly into the manufacturing area." Said warehouse also came under close scrutiny during KLINGER Australia's push towards lean management: "We introduced key performance indicators (KPIs) in order to monitor and hold the

> Applying KPIs has allowed us to rework how we process and cut gasket sheets. This reduces reliance on third-party material suppliers, and materials once deemed scrap can now be reintroduced into the production cycle. Everybody wins – we as the manufacturer, the customer by means of positive cost effects, and the environment as a result of less waste."
>
> Kevin Woolley,
> Managing Director of KLINGER Australia

Streamlined: KLINGER Australia's shop floor has been redesigned for maximum efficiency

necessary stock in the correct quantities. Capable of seeing our inventory in this light, we focused on a single goal: Perfect availability of products for our most important customers in the oil and gas industry," says Ms. Ahola.

On track

Continuously aligning processes, people and systems proved to be highly effective. KLINGER Australia has, for example, managed to significantly speed up the time between receiving and invoicing orders. "Our customers are mainly engineers, plant operators and operations managers," explains Mr. Woolley, "downtimes cost a lot of money, so our ability to provide rapid support in such a case massively benefits them." Furthermore, standard production can now be planned up to 30 days in advance.

Tangible effects

One of the many key performance indicators that underlines KLINGER Australia's road to success is the DIFOT (delivery in full and on time), which is steadily increasing towards the targeted 95 percent mark. Managing Director Kevin Woolley is especially proud of another key factor that has also seen a significant improvement: Applying KPIs enabled the Australians to identify and monitor the volume of generated waste materials as well as their respective disposal cost. "We took these figures and used them to rework how we process and cut gasket sheets," confirms Mr. Woolley, "this has dramatically reduced our reliance on third party raw material suppliers. In addition, materials previously deemed waste or scrap can now be reintroduced into the production cycle. Everybody wins – we as the manufacturer, the customer by means of positive cost effects, and the environment as a result of less waste."

Looking to the future

Kevin Woolley is quick to point out that despite excellent progress, it is still early days in KLINGER Australia's drive towards becoming the ideal lean organization: "We are going to take a closer look at new technologies to further enhance our manufacturing base. Options currently on the table include fiber laser equipment for diversified metallic cutting, outer ring fitting automation for spiral wound gaskets as well as CNC lathes and ring rolling equipment." According to the company's managing director, training personnel in the art of being lean will also remain a priority: "When it comes to lean management, the key to success is that everybody has to be on the same level. As a learning organization, this is a must – especially if we want to further improve our service provision to the Southeast Asian market."

The lean management approach extends across all processes and departments

LEAN ON MIR

KLINGER Kempchen applies robotics to boost lean management

On the road again: MiR covers a distance of more than 10 kilometers on a daily basis. The robot reliably brings components wherever they are needed

The German static sealing technology expert KLINGER Kempchen continues to make lean management headlines. The company has acquired a MiRHook 200 mobile industrial robot to take over a wide range of intralogistics tasks. What the automated knee-high helper can do to generate value for the customer, is described below.

Coming into contact with the MiRHook 200 on the shop floor is a very low-key experience. It looks a bit like a miniature tow truck with a slightly futuristic design. Its features, however, make it the ideal intralogistics solution. KLINGER Kempchen's Marc Madsen, Head of the CNC turnery, knows all about the robot: "MiR comes equipped with impressive mapping capabilities. These ensure that it is absolutely familiar with the layout of our factory. It can therefore pick the most efficient route to bring a component to its desired destination." Obstacles, for example crates along or even in the chosen path, are not a problem, either: The six on-board sensor suites and 360° scanning guarantee that any navigational hazard can be overcome. MiR also takes work safety aspects into account: There is no danger of the machine bumping into any of its human colleagues or causing a person to accidentally trip.

The robot MiR enables employees at KLINGER Kempchen to focus on their core business

Perfect intralogistics solution

MiR picks the right article from the correct bin and subsequently takes the "leanest" route from A to B. But what are its heavy lifting capabilities like? "The MiRHook 200 has a combined transport capacity of 500 kilograms. This makes it ideal for industrial environments such as ours," states Marc Madsen. He adds: "We enhanced the system with an update at the end of October. This allows MiR to now also trigger and pass through the sliding gates of the factory via radio signal."

MiR supports value creation process

How have KLINGER Kempchen's employees responded to their new little helper? Klaus Schonebeck, Managing Director of KLINGER Kempchen, explains: "The feedback we have received is very good. Especially with regard to its ease of use and performance." Mr. Schonebeck adds: "MiR efficiently takes over the monotonous and time-consuming tasks that would otherwise have to be done with forklifts. This frees up resources for more demanding and worthwhile duties. Or, to put it in the phraseology of lean management: Tasks that have real value for the customer."

SUCCESS STORIES

Project highlights from around the world

No matter whether the task at hand is finding a long-term answer to leakages in Thailand or solving scaling problems at a geothermal power plant in Germany: Thanks to its global network of companies, KLINGER is able to provide an adequate solution to any challenge – wherever and whenever it might occur. Featuring in-depth sealing technology, fluid control and instrumentation knowledge, coupled with detailed know how of our customers' operations, the KLINGER Group is also called upon to provide its expertise in projects that go beyond our primary product and service offering. These include, amongst many others, potable water and wastewater solutions, around-the-clock refinery services as well as the provision of high-quality wind turbine components.

SMOOTH GEOTHERMAL OPER

KLINGER Fluid Control's KHI ball valves prevent scaling effects

The geothermal power plant operator Erdwärme Grünwald is at the forefront of Germany's energy transition

"Erdwärme Grünwald", with its geothermal power plant for district heating purposes, is a German energy transition pioneer. In the course of standard operation, however, the facility encountered significant performance issues and suffered unexpected downtime. The operators undertook several measures to remedy the situation – with mixed results. The Austrian company KLINGER Fluid Control was subsequently brought on board to provide a lasting solution. Their answer: KLINGER Ballostar KHI.

CONVENTIONAL VALVE SOLUTIONS:
Butterfly valves

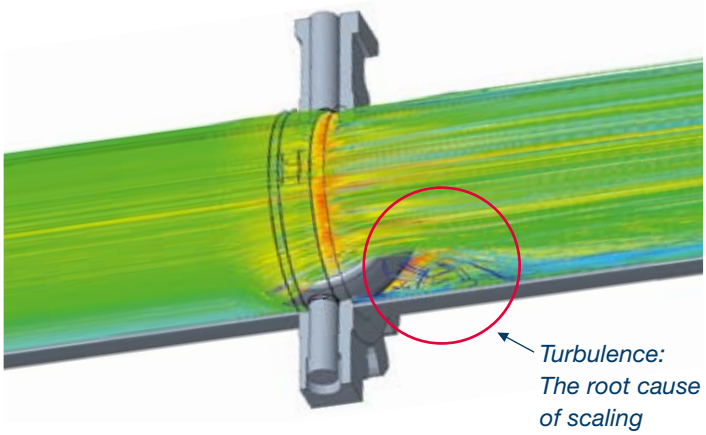

» **Purging required every few months**

SUPERIOR VALVE SOLUTIONS:
Ball valves (with flushing connections)

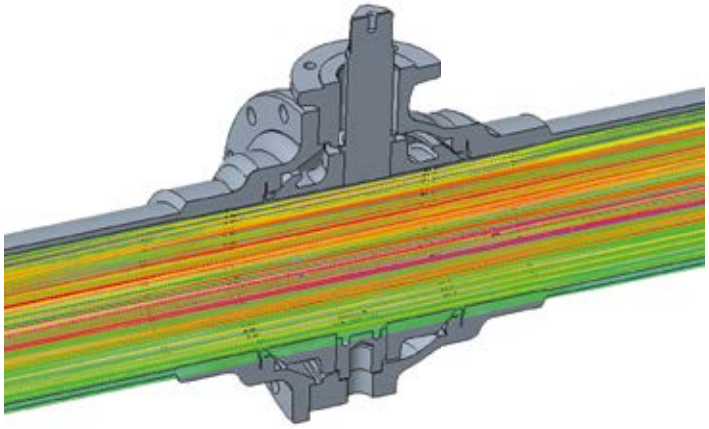

» **Trouble-free operation for years**

A flow comparison between a conventional valve and a KLINGER KHI ball valve highlights the localized area of turbulence caused by the disk of the butterfly valve

RATION

When the Erdwärme Grünwald geothermal power plant experienced unexpected downtimes and output issues, the source was quickly identified: Scaling. This term describes an undesired accumulation of matter in the pipe system, e.g. in the form of crystallized solids. It is frequently observed in geothermal water applications that feature an operating temperature greater than 70 °C as well as pressure fluctuations in the pipe system. And this phenomenon was also affecting the availability and the efficiency of the facility located in Oberhaching-Laufzorn, south of Munich.

Cause and effect

Horst Wagner, Technical Head of Erdwärme Grünwald, remembers the efforts his team undertook to remedy the situation. "We repeatedly had to purge the system with sulfuric acid," he explains, adding: "The performance losses, however, returned after a few months. Furthermore, the process cost us a lot of time and money." Mr. Wagner quickly understood that they were only removing the symptoms, but not the cause. So he consulted the valve manufacturer KLINGER Fluid Control. Having inspected the plant, the Austrian fluid control solutions provider was able to identify the scaling root causes at the geothermal power plant. Jörg-Gregor Marquardt of KLINGER Fluid Control explains: "Scaling heavily depends on the pipe system architecture and the type of valve employed there." He adds: "Pipe bends, especially in the supply line from the production well to the heat exchanger, pose a significant problem. This is a critical area with regard to pressure changes and scaling." According to Mr. Marquardt, butterfly valves also pose a problem: " The valve is always exposed to the medium. When opened, the disk is oriented in parallel to the flow direction. And the result is similar to a blade that 'cuts' the thermal water: It causes turbulences. In other words, the pressure fluctuates at the butterfly valve." Last but not least, butterfly valves in geothermal processes are prone to malfunctioning: The solids tend to accumulate at the valve. This ultimately renders its opening and closing functions inoperable. As Horst Wagner of Erdwärme Grünwald can confirm, the results are further maintenance and service costs as well as additional downtime.

KLINGER Ballostar KHI to the rescue

In the course of their cooperation, KLINGER Fluid Control made an important recommendation to bring the output of the geothermal power plant back to the desired level: Exchanging the installed butterfly valves with KLINGER Ballostar KHI ball valves. Xaver Gruber, Managing Director of KLINGER Fluid Control, explains why: "KLINGER Ballostar KHI ball valves are designed for all kinds of district power applications. As a result of their full bore, their metallic sealing elements as well as the hard-chromium plated ball and flushing connections, little or no scaling occurs."

Operational spectrum restored

KLINGER Fluid Control provided a total of nine KLINGER Ballostar KHI ball valves in the dimensions DN 150 to 300. They have been installed upstream of the heat exchanger in the thermal line and downstream of the heat exchanger in the district heating process. Horst Wagner is happy to report that they are working as intended: "Scaling has been reduced to an absolute minimum. We have not had a single period of downtime since their delivery and the valves shut reliably." He concludes: "With our geothermal power plant now again operating at peak conditions, we can focus on our core business and return to contributing to the energy transition and a greener future."

Due to their design, butterfly valves are especially prone to the effects of scaling

A row of DN 150 KLINGER Ballostar KHI ball valves installed at Erdwärme Grünwald

LOOK TO WINDWARD

KLINGER UK ensures smooth operation of wind turbines

The slip rings supplied by KLINGER UK play an important role in ensuring the smooth operation of wind turbines

KLINGER UK is well known in the industry as a supplier of metallic gaskets and jointing materials. Thanks to its undisputed metal working expertise and know-how, the company is also frequently contracted to machine metallic components that are not necessarily related to the sealing industry. Slip rings, a major component found in wind turbines, are such an example. And these products, provided by a highly skilled group of engineers, aptly named KLINGER Precision, have exceeded the customer's expectations.

KLINGER UK's slip ring customer is a multinational company that also manufactures and refurbishes wind turbines. "We have been doing business with them for around 25 years," confirms Mick Foulds, Managing Director of KLINGER UK, and adds: "Up until this order, they were mostly interested in our KLINGERSIL fiber-reinforced gasket sheet materials." According to Mr. Foulds, this rapidly changed when representatives of the company toured the Bradford plant and saw KLINGER UK's machining capabilities up close. "The request to investigate the potential of supporting them in the manufacture of instrument slip rings literally arrived out of the blue," states Gary Sheldon, manager of the KLINGER Precision specialists, "needless to say, we immediately got to work."

KLINGER Precision is renowned for the tailored customer components it produces

Shaped up: A slip ring in the vertical turret lathe

High-risk component

Instrument slip rings are found in a number of applications, primarily in the space and defense industry as well as in wind power and robotics. A slip ring consists of a conductive circle or band, which is mounted on a shaft and insulated from it. Generally speaking, these electromechanical devices are used to electrically connect a rotating part with a stationary structure. Electrical connections from the rotating part of the system are made to the rings, and transfer electrical power or signals to the exterior, usually the static part of the system. So much for the theory. In practice, however, Gary Sheldon and his team were not only tasked with machining the parts, but also with finding a company willing and able to forge the ingots, which form the initial stage of the product. He remembers: “At the time we were brought on board, the client had been experiencing a number of supply chain issues: Delivery and quality were strongly expressed as areas of concern. Having subsequently gone through the process of finding an ingot supplier ourselves, I can fully relate to their woes.” What Mr. Sheldon is hinting at is the fact that the high-carbon, chromium steel ingots can undoubtedly be defined as high-risk: “An ingot that has to be scrapped as a result of non-compliance with specifications is a costly matter. To make matters even worse, resupplying ingots takes around eight to ten weeks. In the case of wind turbine refurbishments,

The forgings consist of high-carbon, chromium steel

which are extremely time-critical due to the required downtime, this quickly results in significant delays and penalties.”

Full service

In the end, the British team was able to find a European ingot supplier confident enough to take on the ingot forging challenge. Work on the slip rings then began in earnest. “The technical drawings we received can only be described as decades-old,” says Gary Sheldon, “in order to improve our results, we redrew them in their entirety.” Having done so, the manager of KLINGER Precision and his colleagues spent the next three months on development work and machine trials, which ultimately resulted in a viable procedure. “The first order was successfully completed around six months later. The slip rings were subsequently installed in a South African offshore wind park,” reveals Mr. Sheldon, visibly proud of the achievement. Since then, KLINGER Precision has gone on to supply more than 15 variations, which differ in terms of size, style and levels of complexity. Needless to say, a high level of precision and tight manufacturing tolerances always apply, but this is precisely what KLINGER Precision is renowned for. Looking back, Mr. Sheldon had the following to say: “Becoming involved in a project such as this one is always a challenge we are willing to accept. It is especially pleasing to see such a complex component become a part of the KLINGER product range – one that we can offer to multiple industries.”

Coordinate-measuring machines are used to guarantee absolute precision in the slip ring production

SENTRY-APPROVED

KLINGER Thailand awarded KLINGER Sentry SR order

Chevron is a multinational energy corporation

KLINGER Thailand, working together with KLINGER Australia and KLINGER UK, has won an order from Chevron. Following intensive negotiations, on-site testing and technical verification, the global energy company placed an initial order for the delivery of 170 sets of Sentry SR seal rings in February 2019. These enable the new customer to carry out reverse integrity testing on hubs to ensure his pipe system remains free of leakages.

"We first presented our KLINGER Sentry solution to Chevron back in August 2017," remembers Jet Somsuphangsri of KLINGER Thailand, "discussing the company's requirements with a team of main flow line engineers, their purchasing department and quality assurance & control personnel, we were able to identify a need for KLINGER Sentry SR reverse integrity seal rings, which could be used on their flow line hubs."

Sentry duty

"Our range of KLINGER Sentry gaskets allow for individual leak testing on flanged joints without the need for full system pressurization," explains Mathew Craggs, Technical Lead at KLINGER UK, and adds: "Their primary purpose is to speed up leak testing." Using this highly innovative reverse integrity testing product results in

shorter and less downtime as well as in a significantly reduced volume of required testing media. Furthermore, individual joint integrity can be validated directly at the time of installation, which almost negates the necessity of having to re-visit the joint. Should a leakage nevertheless occur, it can be easily remedied by testing and adjusting the joint in a single go.

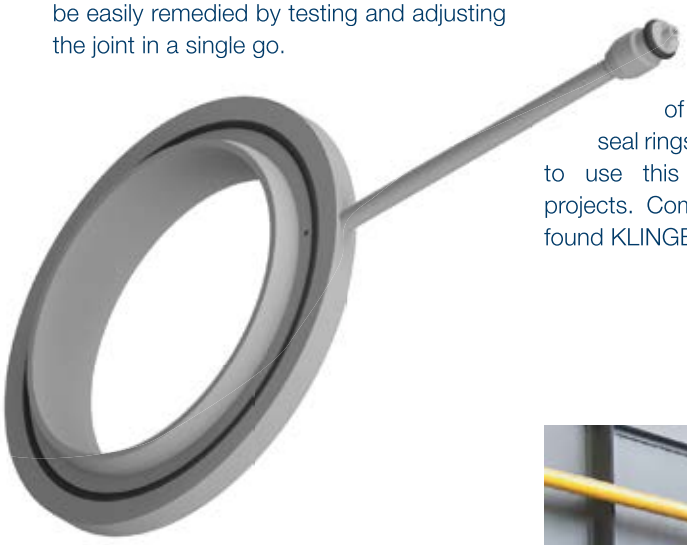

The KLINGER Sentry SR has been specifically designed to integrity-test clamped connections

From Sentry to SR

"In order to provide Chevron Thailand with a solution to their leakage issues, we proposed the KLINGER Sentry SR," confirms Mr. Somsuphangsri. He adds: "This reverse integrity gasket, which retains the full functionality and benefits of the Sentry gasket series, has been specifically designed for integrity testing of clamped connections, such as for example the hubs utilized by Chevron." For the Thai and Australian team, this proved to be the first breakthrough. Upon the customer's request, in-house pressure tests were carried out on the seal rings at the hub manufacturer's business location. The KLINGER Sentry SR, which has been rated by global operators for pressures of up to 5,000 psi, passed these trials with flying colors. A final round of tests, this time conducted to the south of Thailand in February 2019, finally convinced the customer: Chevron ordered the first 170 reverse integrity gasket sets.

High praise

Following six months of leakage-free operation, Chevron Thailand provided Mr. Somsuphangsri with the following feedback: "The KLINGER Sentry SR has helped Chevron Thailand to solve past leakage issues. To date there have been no incidents of leakage with KLINGER's seal rings and we are already planning to use this product in our upcoming projects. Commercially speaking, we also found KLINGER to be more competitive."

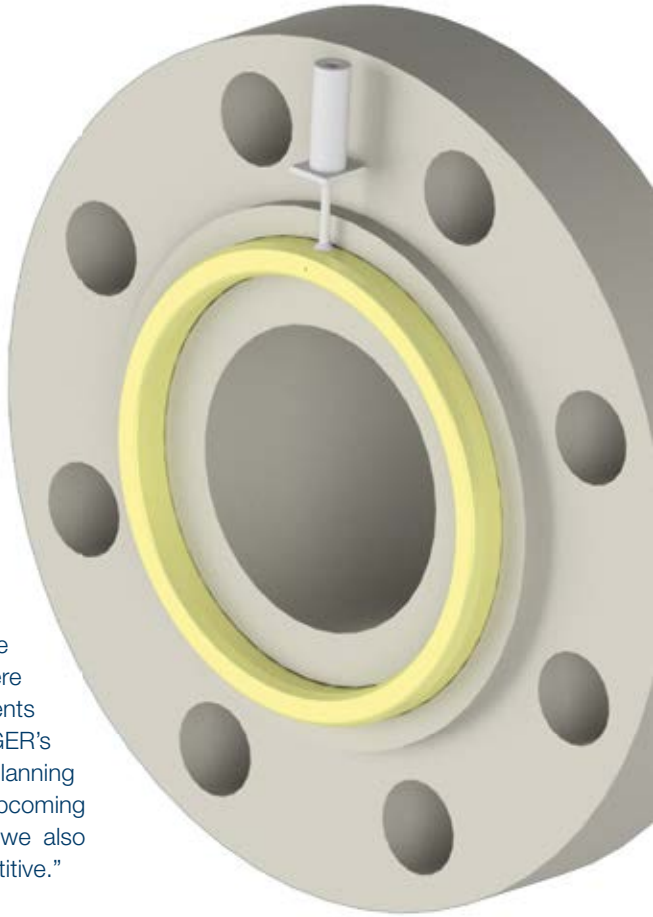

The Sentry RTJ is KLINGER's reverse integrity gasket for raised face flanges

Thumbs-up: The KLINGER Sentry SR passes the pressure tests with flying colors

LEAVE NO ONE BEHIND

KLINGER Argentina's Water & Sewage Division

State of the art control valves play an important role in KLINGER Argentina's work for waterworks and municipalities

KLINGER Argentina features a set-up that is uniquely adapted to meet one of the most important needs of the country it serves: With its Water & Sewage Division, the Argentinian company has been tackling water-related challenges since 1999. Its references in this field include both national and provincial projects. And with regard to its efforts and success rate, the Division's motto could very well be "leave no one behind."

"In order to understand the significance of our Water & Sewage Division, one has to be aware of certain key figures," says Alberto Pinter, Managing Director of KLINGER Argentina, "50 percent of our population does not have sewage services." He pauses to let this sink in, adding: "And 16 percent of the country's inhabitants do not have access to a safe water network. These facts underline the importance of professional wastewater and potable water services, which our division provides." According to Mr. Pinter, KLINGER Argentina's offering primarily focuses on municipal and infrastructure solutions, specifically on waterworks.

"We see it as our duty to support the growth and development of our country with our products and services."

Alberto Pinter,
Managing Director of KLINGER Argentina

Full package

As is to be expected from a country where access to water-related services is an issue, competition is fierce. KLINGER Argentina's Water & Sewage Division nevertheless manages to stand out among its main competitors due to a very down-to-earth approach in terms of its product offering. "Our projects typically include air relief, butterfly, control, gate, knife gate and duo check valves. We also offer couplings, flow and water meters, repair clamps and fittings as well as surge vessels and corresponding modeling software," summarizes Cristian Gonzalez, Sales Manager of the Water & Sewage Division. He adds: "This range comprises products from both KLINGER and other high-quality manufacturers. We work in a critical field, where maintaining

or restoring the supply of water to a fully operational state is paramount. In order to do so, we select the solution best suited to resolve the problem – considerations regarding the utilized brand are secondary in this context." KLINGER Argentina can already look back on more than 20 years in the water market. This has led to an impressive accumulation of knowledge, from which its customers benefit. "Next to high-quality products at competitive prices, we can provide full fluid control packages for a specific project. This also includes technical advice regarding control and air relief valves, our stock of universal fittings and rubber gate valves, aftersales services as well as technical consulting and trainings for plant employees," says Mr. Gonzalez, listing but a few of the company's benefits.

Track record

As part of a company that is on call to provide support and aid wherever it is required in Argentina, the Water & Sewage Division has accumulated a significant amount of references and – due to the size of the country it serves – a considerable mileage. In 2017, for example, Cristian Gonzalez and his team responded to an emergency in the province of Santa Fe. Two of the gate valves of the state-run water services provider Aguas Santafesinas had broken down. As the company provides around 60 percent of the province's population with potable water, the situation was indeed critical. KLINGER Argentina was able to identify and remedy the problem. In this case it was a faulty installation coupled with an incorrectly applied torque. Next to waterworks, the Argentinian fluid control experts are also at hand wherever the topic at hand is "only" water-related. For example at the Futaleufú hydrolectric power plant: Mr. Gonzalez and his colleagues were brought on board to find a way to shield the plant's water-bearing, critical components from cavitation effects. This was achieved by means of special pressure reduction valves. The Water & Sewage Division also played an important role in the second Chaco aqueduct project, where it carried out a surge analysis for the upgrade to a 100 km long main water line. This was done to guarantee that water hammers, which could ultimately collapse the pipe, are avoided. Furthermore, it provided consulting services for the selection of the dual-chamber pump control valves and control panels that ensure fault-free operation. High pressure was also a focal point in the Termas de Reyes aqueduct project. The Argentinians were able to resolve the issue at hand with pressure reduction valves.

For the good of all

Summarizing the work of his Water & Sewage Division, Managing Director Alberto Pinter states: "We enjoy excellent business relations with waterworks and municipalities such as Argentine Water and Sanitation (AySa), Aguas Santafesinas, Aguas Cordobesas and the majority of the country's water and sanitation companies. We see it as our duty to support the growth and development of our country with our products and services. Applying the vast amount of technical knowledge and experience, coupled with top-of-the-line products and solutions, this is exactly what our Water & Sewage Division does. Every day."

The Water & Sewage Division was instrumental in protecting the Futaleufú hydrolectric power plant's critical components against cavitation effects

CONTRACT RENEWED

KLINGER UK retains partnership with major UK oil refinery

KLINGER UK provides a wide range of on-site services for refineries

The Stanlow Manufacturing Complex in Cheshire is owned and operated by a major global oil operator. As a key player in the national economy, this company is responsible for around 16 percent of the United Kingdom's transport fuels. KLINGER UK has already been servicing the plant for more than 20 years. The British metallic gasket and jointing specialist is proud to report that it has now retained its contract and will continue to provide a wide range of on-site services.

The supply contract recently won by KLINGER UK, might be seen by some as "business as usual". Not so at the manufacturer and supplier of metallic gaskets, jointing materials, insulation sets, compression packings and associated products: "KLINGER UK is one of the few companies in the industry to employ first-rate quality and service combined with value adding products and services. We are certified in accordance with both ISO 9001:2015 and BS EN 9100:2016," states Mathew Craggs, Technical Lead at KLINGER UK, adding: "Our firm commitment to quality and innovation is not restricted to our processes, however. It is also the driving force in doing business with and providing best service for our customers. Our in-depth knowledge of customer facilities and operations plays a major role in this context: "We will not only be providing daily sealing solution requirements, shutdown-support, design calculations as well as other on-site and flange management services at the Stanlow plant," he confirms, "we will also be in charge of trainings relating to our products as well as to best practice gasket installation." With regard to the new contract, Mr. Craggs explains that the refinery will benefit from an increased focus on reliability as well as on technical support.

KLINGER Maxiprofile gaskets are designed for high-temperature and high-pressure applications, making them an ideal choice for refineries

Scope of supply and services

KLINGER is "trusted. worldwide." for the adherence to the highest quality standards and a convincing total cost of ownership approach. Regarding increased reliability, Mr. Craggs highlights that the aforementioned on-site services will primarily focus on heat exchanger reviews as well as on upskilling of staff and stakeholders, specifically brought on board for the task at hand. Asked about the products expected to be utilized, he explains: "Based on our history and knowledge of the plant and the KLINGER range of products and services, we now have the opportunity to showcase our standard range of sealing solutions: From KLINGERSIL to the high integrity Maxiprofile through to additional site services including our KLINGER flange management program and the wider Group product offerings such as valves and expansion joints." He concludes: "KLINGER UK is not 'just' a supplier of high-quality products and solutions with an excellent track record. We see ourselves as our customer's partner. As such, we continuously refine our custom-designed products in order to guarantee maximum safety, technical efficiency and cost-effectiveness."

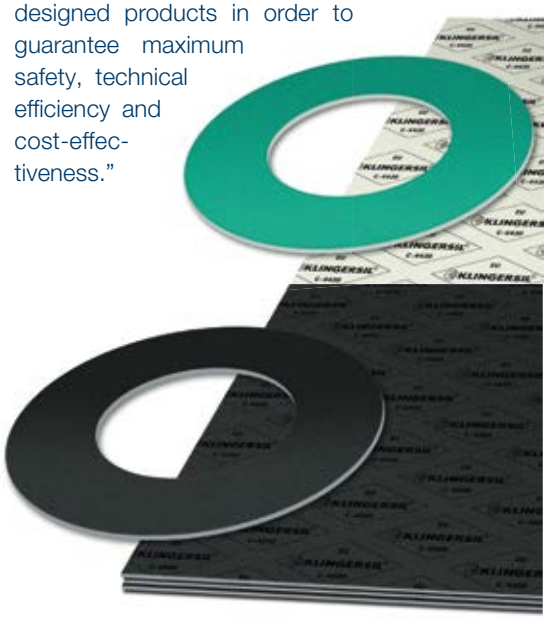

Featuring different fibers and rubber binders, the calendared sealing material product group KLINGERSIL is able to cover a wide range of refinery applications

IN MEMORIAM

Remembering Dr. Thomas Klinger-Lohr

> The man who moves a mountain starts by carrying away small stones.
>
> Confucius

Dr. Thomas Klinger-Lohr

It is with great sadness that we hereby have to inform you about the demise of our dear friend, mentor, former CEO and Chairman of the Supervisory Board, Dr. Thomas Klinger-Lohr.

After a longer period of troubled health Thomas passed away at his family home on October 10, 2019.

His early passing will leave a void among us. Conservative yet progressive and lasting entrepreneurship, paired with a thorough understanding of engineering processes as well as an empowering leadership style are only some of the characteristics for which he will be fondly remembered.

Taking the helm of the KLINGER Group in 1984 as the 4th generation, Thomas Klinger-Lohr was instrumental in the development of KLINGER's non-asbestos sealing portfolio, to which at a later stage graphite and PTFE materials were added. Other milestones in his career included the further internationalization of the Group, especially in the southern hemisphere as well as the merger of KLINGER's automotive activities with ELRING (now forming the stock-listed ELRING-KLINGER group of companies).

He was an "all hands on deck" person. Engaged, modest, loyal. This combination left a mark not only on his business partners and competitors, but also on his family. Married for 47 years, father of two and grandfather of four, he always strived for agreement rather than conflict. It is such wisdom and his humor that we will miss the most.

Farewell, Thomas, we shall always keep you close to our hearts. Our thoughts during these days are with your family, especially your wife Marita.

With sincere gratitude,

Christoph Klinger-Lohr, CEO

Daniel Schibli, CEO

Peter Müller, CFO

KLINGER®
trusted. worldwide.

KLINGER Holding GmbH
Am Kanal 8-10 » A-2352 Gumpoldskirchen
T +43 2252 607 186 30 » F +43 2252 607 186 33
office@klinger-international.com

www.klinger-international.com